Check for updates

Received: 26 December 2021 | Revised: 13 June 2023 | Accepted: 2 November 2023

DOI: 10.1002/for.3049

RESEARCH ARTICLE

WILEY

Volatility forecasting for stock market index based on complex network and hybrid deep learning model

Yuping Song[1] | Bolin Lei[1,2] | Xiaolong Tang[1] | Chen Li[3]

[1]School of Finance and Business, Shanghai Normal University, Shanghai, China

[2]Faculty of Economics and Management, East China Normal University, Shanghai, China

[3]Zhongtai Securities Institute for Financial Studies, Shandong University, Jinan, China

Correspondence
Chen Li, Zhongtai Securities Institute for Financial Studies, Shandong University, Jinan, China.
Email: chenlimath@mail.sdu.edu.cn

Funding information
National Natural Science Foundation of China, Grant/Award Numbers: 71973098, 11901397; Ministry of Education, Grant/Award Number: 18YJCZH153; Shanghai Normal University, Grant/Award Numbers: 310-AC7031-19-004228, 310-AC7031-19-004221, 310-AC7031-19-003021; General Research Fund of Shanghai Normal University, Grant/Award Number: SK201720; Shanghai Planning Project of Philosophy and Social Science, Grant/Award Number: 2023BJB009

Abstract

The existing literature on the volatility forecasting less considered the co-movement among stock markets from the spatial dimension. This paper builds the hybrid convolutional neural networks (CNNs)–gated recurrent unit (GRU) model for volatility forecasting under high frequency financial data based on transaction information and the topological characteristics constructed through the complex network of multi-market symbol patterns. The hybrid neural network CNN-GRU combines the advantages of CNN automatically extracting features for the input indicators and GRU processing long and short-term serially dependent features, which can better improve the forecasting accuracy. The empirical results show that with the integration of topological characteristics as the indicators based on complex network, the deep learning model has a significant improvement of one-step and multi-step volatility forecasting accuracy for the China's and the US stock markets. The research in this paper provides a complete index system from the spatial dimension and a more accurate and robust volatility forecasting method under the high-frequency financial data.

KEYWORDS

complex network, financial volatility forecasting, hybrid deep learning model, topological characteristic

1 | INTRODUCTION

Stock index is a reflection of the overall stock market, and its volatility not only helps investors to measure market risk but also helps policy makers to judge the market trend. Therefore, volatility forecasting for stock index has been an important issue for scholars and practitioners. The traditional econometric models used to estimate and forecast the volatility of financial assets are mainly generalized autoregressive conditional heteroskedasticity (GARCH) model (Bollerslev, 1986) and its various variants (Glosten et al., 1993; Nelson, 1991; Zakoian, 1994) and heterogeneous autoregressive (HAR) model (Corsi, 2009; Corsi et al., 2008). However, with the increasing complexity of financial markets, it is difficult for traditional econometric methods to handle massive amounts of data, and the widespread use of machine learning has brought new opportunities for volatility forecasting. Ma and Wu (2018) use support vector machines (SVMs) to forecast financial option volatility. Xiong et al. (2016), Chen (2018), and Liu (2019) indicate that the long short-term memory (LSTM) neural network model outperforms machine learning models in forecasting effects through empirical studies.

 © 2023 John Wiley & Sons, Ltd.

From the time dimension, the time series of stock index is serially dependent, so historical data can partially explain future volatility. However, the above literatures only forecast volatility from the time dimension and do not consider the co-movements and interactions between multiple markets from the spatial dimension. From the spatial dimension, the increasing capital flows make the financial entities more closely connected, and the financial product innovations make the financial networks more complex. Consequently, the single series of each stock index is not completely uncorrelated with each other. The complex networks can extract indicators in the form of network structure to measure the interactions, such as network node structure and network connection strength. It is used to measure the interrelationships between different financial assets (Bonanno et al., 2004). Caldarelli et al. (2004), and Li and Wang (2006) construct stock volatility networks based on data from New York Stock Exchange (NYSE) and National Association of Securities Dealers Automated Quotation (NASDAQ). Yang et al. (2014), Brancaccio et al. (2018), and Liu and Arunkumar (2019) use complex networks to study risk contagion among financial markets, and Ouyang et al. (2015), Saeedian et al. (2019), and Liu et al. (2019) employ complex networks to study correlations among different financial markets.

Although there is a lot of literature using complex networks to study financial markets, there are fewer using complex network indicators for stock index volatility forecasting. In this paper, we firstly use complex network indicators to extract the correlations and interactions among different stock markets and then use them together with other market information as influencing factors for stock index volatility. In order to reduce the errors added by irrelevant factors and low correlation factors to the forecasting model, we use XGBoost model to rank the importance of factors and filter out the influencing factors with high weight and input them into the hybrid convolutional neural network (CNN) and gated recurrent unit (GRU) model for volatility forecasting. To reduce the random error in one result, we have run each model for 10 times separately and taken the average results for comparison. When multi-market interactions are not considered, the results show that the CNN-GRU model possesses the best prediction accuracy, 11.942% higher than the GRU model. With the inclusion of multi-market topological features, the average error of CNN-GRU, GRU, K-Neighbors, support vector regression (SVR), random forest, and gradient boosting are reduced by 8.089%, 0.682%, 9.085%, 12.662%, 2.273%, and 9.538%. Additionally, it is observed from the indicator importance results calculated through XGBoost that the complex network indicators, especially network average degree centrality and closeness centrality, rank higher. We have also done the Diebold Mariano (DM) test and the 5-step forecasting result, both of which verified the above results.

The innovations of this paper are mainly two-folds. In terms of the volatility forecasting indicators, the existing literatures only forecast volatility from the time dimension and do not consider the co-movements and interactions between multiple markets from the spatial dimension. In this paper, the topological characteristics from the spatial dimension constructed through the complex network of multi-market symbol patterns, which includes not only the changing characteristics of a single stock market but also the changing characteristics of the overall market. Hence, the indicator system for stock index volatility forecasting in this paper is constructed from the time and space dimensions, which not only considers the market trading indicators but also constructs the network topological characteristics among different stock markets as the forecasting input variables. In terms of the volatility forecasting models, CNN can adaptively learn the local correlation of volatility forecasting indicators and extract information with volatility forecasting ability from the correlation of prediction indicators, but it lacks the ability to learn and identify the long-term and short-term dependence characteristics of time series. Although GRU has the function of long-term information memory, it lacks the ability to learn the topological characteristics of complex networks and the local characteristics of other prediction variables. The hybrid CNN-GRU network combines the advantages of CNN and GRU, make up for each other's shortcomings, and makes full use of the powerful performance of CNN in features extraction and the ability of GRU to learn long-sequence information. Hence, the CNN-GRU model considered in this paper can incorporate the serial dependence of financial time series data and the correlation features of different financial market time series data into the same model to extract the short-term attention features and long-term influence of time series data to improve the explanatory capability and forecasting accuracy.

This paper is organized as follows. Section 2 introduces the calculation of complex network topological characteristics and the influencing indicators system and CNN-GRU model for volatility forecasting. Section 3 presents the empirical analysis of multiple models and the evaluation of volatility forecasting results of the Shanghai Stock Exchange (SSE) index based on the co-movements of China's domestic markets and co-movements of international markets and verifies the effectiveness of the CNN-GRU model incorporating complex network topological characteristics used in this paper using S&P500 Index data. Section 4 concludes and extends.

1099131x, 2024, 3, Downloaded from https://onlinelibrary.wiley.com/doi/10.1002/for.3049 by Sichuan University, Wiley Online Library on [24/03/2026]. See the Terms and Conditions (https://onlinelibrary.wiley.com/terms-and-conditions) on Wiley Online Library for rules of use; OA articles are governed by the applicable Creative Commons License

2 | INDICATOR SYSTEM AND FORECASTING MODEL

2.1 | Indicator system

2.1.1 | Complex network construction and topological characteristics

First, we construct a pattern network for the stock market based on Cao et al. (2019) and then calculate the network topological characteristics as volatility forecasting indicators.

Construction of a pattern network for the stock market
First, the patterns for stock price are divided into four categories: sharp rising, slow rising, sharp falling, and slow falling according to the sign of the return rate and the relationship between the stock's volatility and the average volatility of the overall market. The expressions are as follows:

$$\begin{cases} P1, R \geq 0 \, and \, RV \geq RV' (Sharp\ Rise) \\ P2, R \geq 0 \, and \, RV < RV' (Stable\ Rise) \\ P3, R < 0 \, and \, RV < RV' (Sharp\ Decline) \\ P4, R < 0 \, and \, RV \geq RV' (Stable\ Decline) \end{cases}, \tag{1}$$

where R is the return rate in the past 5 days, RV is the volatility in the past 5 days, and RV' is the average volatility for the overall market. The sliding time window method is used to calculate R and RV, which is set to 5 days. The formulas are as follows:

$$R_t = ln \frac{Close_t}{Close_{t-5}}, \tag{2}$$

$$RV_t = STD(r_t, r_{t-1}, ..., r_{t-5}), \tag{3}$$

where $Close_t$ is the closing price on day t and r_t is the daily return rate calculated as follows:

$$r_t = ln \frac{Close_t}{Close_{t-1}}. \tag{4}$$

The average volatility of a single stock index in a period of time is calculated as follows:

$$\overline{RV_t} = \frac{1}{N} \sum_{t=1}^{N} RV_t, \tag{5}$$

where N is the number of days. The average volatility of a market with M stocks over N days is calculated as follows:

$$RV' = \frac{1}{M} \sum_{t=1}^{M} \overline{RV_t}. \tag{6}$$

According to the method above, the price pattern of each stock is calculated and combined to get the corresponding symbolic pattern for each day. In the China's domestic market, we consider the symbolic pattern network of Shanghai Stock Index, Shenzhen Component Index, and Hang Seng Index. Moreover, to study the impact of international market co-movements on the volatility of China and US Stock Markets, the Shanghai Stock Index, Hang Seng Index, and S&P500 Index are used to construct the symbolic pattern network.

Taking the daily combined symbolic patterns (such as P1P3P4) as the nodes, if one combination patterns can be converted to another, the weight of the edge between the two nodes is 1, and vice versa. Under the premise of accuracy, to reduce the computational complexity, the sliding time window can be set to calculate a complex network within a period. A complex network can be calculated in every window, and the number of days is equal to the number of nodes.

For example, if the time window is 6 days, the 6-day combination patterns are P1P1P1, P2P2P3, P2P3P1, P1P2P2, P3P3P4, and P2P2P3. Then, a pattern network composed of 6 nodes is obtained as shown in Figure 1. Figure 1 is a 6-day pattern network, so there are five sides. Among them, because the combination of Days 6 and 2 is the same, there are five nodes instead of six. After comparing the accuracy of the models, we choose 30 days as the time window.

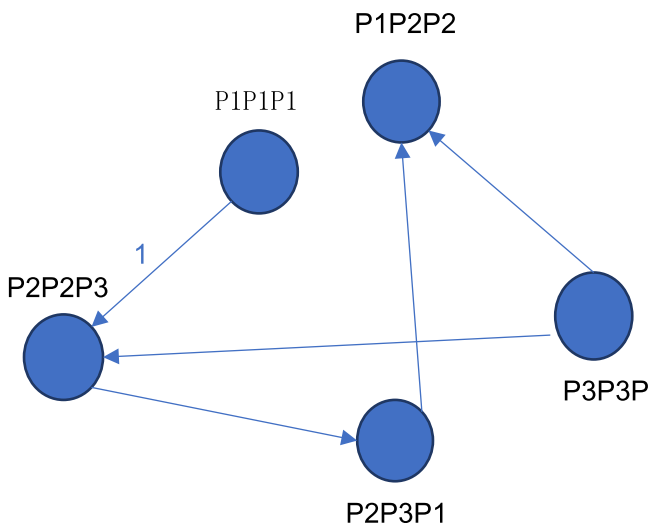

FIGURE 1 Pattern network diagram (the time window is 6 days).

1099131x, 2024, 3, Downloaded from https://onlinelibrary.wiley.com/doi/10.1002/for.3049 by Sichuan University, Wiley Online Library on [24/03/2026]. See the Terms and Conditions (https://onlinelibrary.wiley.com/terms-and-conditions) on Wiley Online Library for rules of use; OA articles are governed by the applicable Creative Commons License

Calculation of network topological characteristics

In this paper, we will calculate four network topological characteristics such as the network average degree centrality, average network strength, network average shortest path length, and network closeness centrality and then add them into the indicators system of volatility forecasting model.

① Network average degree centrality (P)

It is the ratio of the actual number of connections to the maximum number of connections, which measures the edge density of the network and is calculated as follows,

$$P = \frac{1}{N^2}\sum_{i=1}^{N}\sum_{j=1}^{N} a_{ij}, \tag{7}$$

where N is the number of nodes in the network and $a_{i,j}$ is the value of the adjacency matrix of the undirected network. If the nodes i, j are connected, then $a_{i,j}$ is 1; otherwise, it is 0.

② Average network strength (S)

It describes the complexity of the network. The greater the average network strength is, the simpler the combination of the price pattern is, and the smaller the complexity of the network is. The connection strength from node i to node j is equal to the weight w_{ij} of the directed edge from node i to node j. Because the outgoing intensity and incoming intensity are the same, we select the outgoing intensity as the average network intensity:

$$S = \frac{1}{N}\sum_{i=1}^{N}\sum_{j=1}^{N} w_{ij}. \tag{8}$$

③ Network average shortest path length (L)

It measures the degree of separation of the network and describes the conversion efficiency and speed between combination patterns. The shorter the average shortest path is, the fewer other patterns the combination patterns can interact with. The distance d_{ij} from node i to node j is defined as the minimum number of edges required to pass from node i to node j. The average shortest path length of the network is the average length of all the shortest paths in the network:

$$L = \frac{1}{N(N-1)}\sum_{i=1}^{N}\sum_{j=1, j\neq i}^{N} d_{ij}. \tag{9}$$

④ Network closeness centrality (C)

It is used to describe the difficulty of information transmission, which is the conversion time and conversion period between combination patterns. The greater the network closeness centrality is, the more concentrated the conversion area of the entire network is. The closeness centrality of node i is the reciprocal of the average shortest path length from other nodes to node i:

$$C_i = \frac{N-1}{\sum_{j=1}^{N} d_{ij}}. \tag{10}$$

Defining the weighted shortest path l_{ij} as the shortest weighted distance from node i to node j, the closeness centrality of the network can be obtained as

$$C = \frac{1}{N}\sum_{i=1}^{N}\frac{n-1}{N-1}\frac{n-1}{\sum_{j=1}^{n-1} l_{ij}}, (i \neq j), \tag{11}$$

where N is the total number of nodes and n is the number of nodes reachable to node i.

2.1.2 | Forecasting indicator system

Besides the above four complex network topological characteristics, the volatility forecasting indicator system in this paper also includes 9 transaction information indicators and the realized volatility based on the high frequency financial data. According to the definition of realized volatility in Andersen and Bollerslev (1998), two adjacent 5-min logarithmic closing price data $P_{t,d}$ are used to calculate the high-frequency return rate $R_{t,d}$, which is:

$$R_{t,d} = 100(lnP_{t,d} - lnP_{t,d-1}), \tag{12}$$

where $t = 1,2,3, ..., 2356$, $d = 1,2, ..., 48$. Then the realized volatility RV_t on day t is the sum of the squares of all high-frequency return rates,

$$RV_t = \sum_{d=1}^{48} R_{t,d}^2. \tag{13}$$

The specific names and calculation methods of volatility forecasting indicators are shown in Table 1.

1099131x, 2024, 3, Downloaded from https://onlinelibrary.wiley.com/doi/10.1002/for.3049 by Sichuan University, Wiley Online Library on [24/03/2026]. See the Terms and Conditions (https://onlinelibrary.wiley.com/terms-and-conditions) on Wiley Online Library for rules of use; OA articles are governed by the applicable Creative Commons License

TABLE 1 Volatility forecasting indicators.

Name	Meaning	Formula
P	Network average degree centrality	Formula (7)
L	Network average shortest path length	Formula (9)
S	Average network strength	Formula (8)
C	Network closeness centrality	Formula (11)
Volume	Daily volume	
Money	Daily transaction amount	
Bias	The degree of deviation from the moving average	(Closing price − 5-day moving average)/5-day moving average
DMA	Parallel line difference indicator reflecting the energy of buying and selling forces and future price trend	(The highest price of the previous day + the lowest price of the previous day + 2 * the closing price of the previous day)/4
CDP	Contrarian operation indicator	5-day moving average − 10 day moving average
AR	Market buying and selling sentiment	(Closing price − opening price)/(opening price − lowest price) * 100
BR	The degree of market buying and selling desire	(Highest price − closing price)/(closing price − lowest price) * 100
PctChg	Price change	
Night	Overnight spread	Opening price − closing price the previous day
RV	Realized volatility	Formulas (12)–(13)

2.2 | Deep learning model—CNN-GRU

We combine CNN in LeCun et al. (1998) and GRU in Cho et al. (2014) to construct a CNN-GRU volatility forecasting model, which fully considers the prior information of volatility. When taking the indicator system constructed by complex network and transaction information as the input, we firstly use CNN to extract the connections of features in high-dimensional space to form high-dimensional forecasting feature vectors and then use GRU to replace the fully connected layer to forecast the future volatility. In addition, this paper sets 20 days as a rolling window for rolling forecasting.

2.2.1 | CNN-extracting sequence features

The convolutional layer of CNN extracts nonlinear features and gathers these features in the hidden weight layer of the autoencoder. There are three basic components in CNN: convolutional layer, pooling layer, and fully connected layer. The structure (Li et al., 2019) is shown in Figure 2. Assuming that the initial sequence $X_{r\times m} = [x_1, x_2, x_3, \ldots, x_r]$ is used as the input of CNN, in this paper, we use 64 filters to scan the features of the input sequence in the convolutional layer, and the convolution kernel size is 3. Then we select the ReLU activation function to capture nonlinear features, the Max -pooling layer as the pooling layer, and use Dropout technology to alleviate the problem of overfitting, where the Dropout rate is 0.2. Assuming X^{i-1} is the output of layer *i-1* convolutio, k_j^i is the *j*th convolution kernel of the *i*th convolution, b_j^i is the offset coefficient, then the output Y_j^i of the convolution kernel is calculated as follows:

$$Y_j^i = ReLU\left(X^{i-1} \times k_j^i + b_j^i\right). \tag{14}$$

2.2.2 | GRU—Forecasting future volatility

The output sequence after extracting characteristics based on CNN is used as the input of GRU. Based on the recurrent neural network (RNN) (Hopfield, 1982), GRU introduces reset gate and update gate to control the input information flow to capture the short-term and long-term dependencies in the time series. It can effectively alleviate the problem of gradient disappearance in RNN and reduce the amount of calculation on the basis of LSTM. The reset gate is composed of a forget gate and an input gate, which determines the information that needs to be discarded and the new information that needs to be added, and the update gate determines the degree to which the previous information is forgotten.

The inputs of the reset gate and the update gate of the GRU are the input X_t in the current time step and the hidden state H_{t-1} in the previous time step, and the output sequence is obtained through the fully connected layer with the activation function of Sigmoid. The specific structure is shown in Figure 3.

The calculation of the reset gate and update gate is as follows:

1099131x, 2024, 3, Downloaded from https://onlinelibrary.wiley.com/doi/10.1002/for.3049 by Sichuan University, Wiley Online Library on [24/03/2026]. See the Terms and Conditions (https://onlinelibrary.wiley.com/terms-and-conditions) on Wiley Online Library for rules of use; OA articles are governed by the applicable Creative Commons License

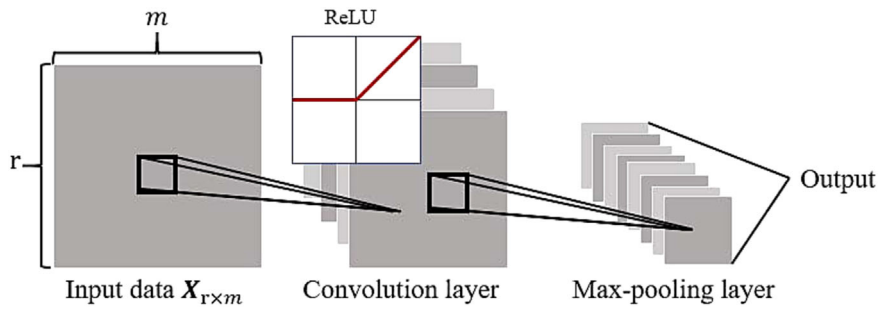

FIGURE 2 Schematic diagram of convolutional neural network (CNN).

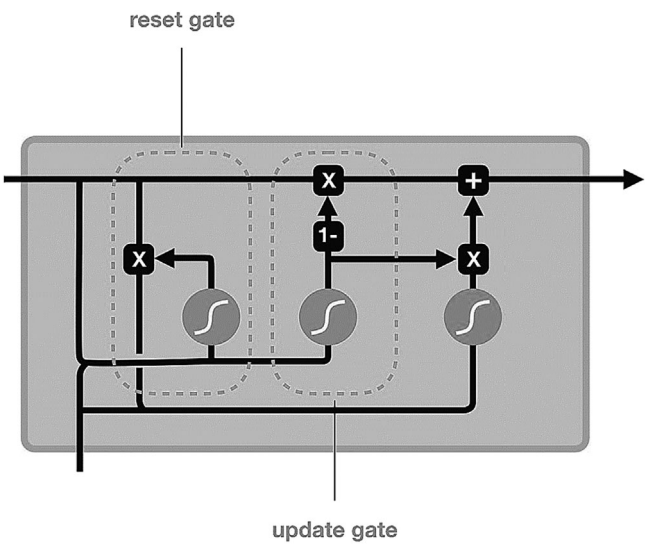

FIGURE 3 Schematic diagram of gated recurrent unit (GRU).

$$r_t = \sigma(W_t \cdot [H_{t-1} \cdot X_t]), \tag{15}$$

$$z_t = \sigma(W_z \cdot [H_{t-1} \cdot X_t]), \tag{16}$$

where σ is the Sigmoid activation function. The output range of the Sigmoid function is from 0 to 1, which makes the optimization results are more stable, and the Sigmoid function is continuous, which is convenient to derive. W_r and W_z are the parameter weights of the reset gate and update gate, and r_t and z_t are the output states of the reset gate and update gate. The weight parameters W_r, W_Z, and W_h below are randomly generated from the distribution shown in Equation (17) and then automatically adjusted during the modeling run.

$$\theta \sim U\left(-\sqrt{k}, \sqrt{k}\right), k = \frac{1}{hidden_{size}}. \tag{17}$$

Additionally, the state H_t in the current time step is calculated as follows:

$$H_t = \emptyset(W_h \cdot [r_t \times H_{t-1} \cdot X_t]), \tag{18}$$

$$H_t = (1 - z_t) \times H_{t-1} + z_t \times H_t, \tag{19}$$

where $\emptyset$ is the tanh activation function. One can perform a nonlinear transformation through the sigmoid activation function to get the current output:

$$Y_t = \sigma(W_o \cdot h_t). \tag{20}$$

2.2.3 | Hybrid neural network CNN-GRU model

CNN can adaptively learn the local correlation of volatility forecasting indicators and extract information with volatility forecasting ability from the correlation of forecasting indicators, but it lacks the ability to learn and identify the long-term and short-term dependence characteristics of time series. While GRU has the function of long-term information memory, it lacks the ability to learn the topological characteristics of complex networks and the local characteristics of other prediction variables. The hybrid CNN-GRU network combines the advantages of CNN and GRU, make up for each other's shortcomings, and makes full use of the powerful performance of CNN in features extraction and the ability of GRU to learn long-sequence information. In order to extract the temporal and spatial dependence of volatility forecasting indicators, we use the adaptive feature extraction ability of CNN to extract the relationship between variables and further employ the time series long memory learning ability of GRU to extract the temporal correlation of this relationship. The first step is to extract the input information such as the topological features P, S, L, and C of symbolic pattern network and other prediction variables through CNN. CNN uses multiple convolution kernels with the same size to extract the spatial dependency of the original feature in high-dimensional space and outputs a vector containing the relevance of the feature and then compresses the time step dimension through the maximum pooling layer to remove redundant

1099131x, 2024, 3, Downloaded from https://onlinelibrary.wiley.com/doi/10.1002/for.3049 by Sichuan University, Wiley Online Library on [24/03/2026]. See the Terms and Conditions (https://onlinelibrary.wiley.com/terms-and-conditions) on Wiley Online Library for rules of use; OA articles are governed by the applicable Creative Commons License

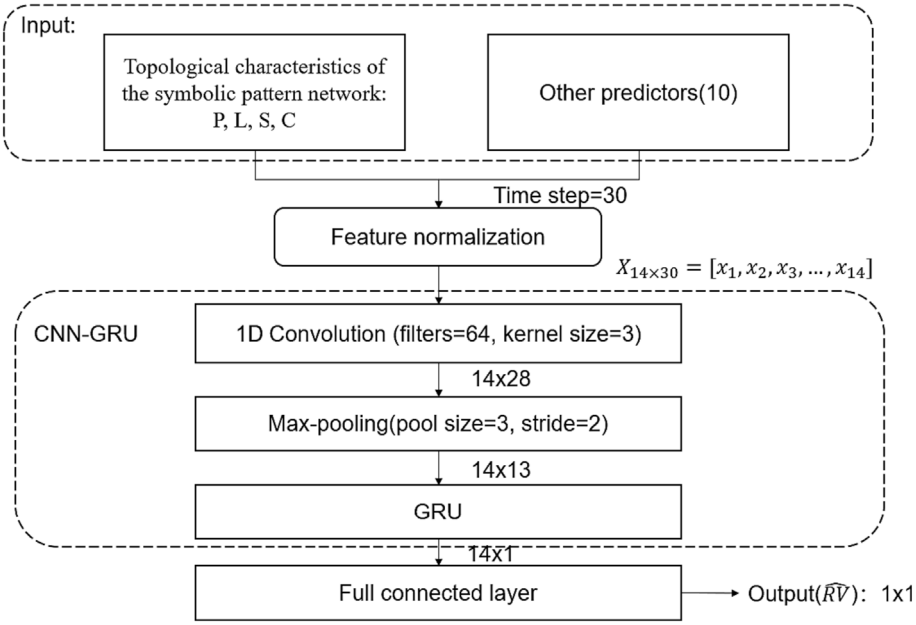

FIGURE 4 Schematic diagram of convolutional neural network–gated recurrent unit (CNN-GRU).

TABLE 2 The optimal values for hyper-parameters in CNN and GRU models selected through RandomizedSearchCV.

	Hyper-parameter	Value
CNN	Convolution kernel size	3
	Number of convolution kernels	64
	Step	1
	Pooling size	3
	Stride	2
	Activation function	ReLU
GRU	Units	10
	Dropout rate	0.2
	Activation function	ReLU
	Optimizer	Adam
	Learning rate	0.003
	Decay rate	0.00005
	Batch size	84

Abbreviations: CNN, convolutional neural network; GRU, gated recurrent unit.

information and reduce the GRU calculation. The second step is to take the output vector of CNN as the input of GRU. GRU can learn the time dependence of characteristics and characteristics dependence and finally obtains the final volatility forecasting values through a full connection layer. The structure of CNN-GRU model is shown in Figure 4.

In order to select the optimal hyper-parameters such as convolution kernel size, Dropout rate, and learning rate in the CNN and GRU models, we use the RandomizedSearchCV, which is a random search algorithm with stronger and faster search capability. Within the specified parameter range, we randomly select the parameter combination with the minimum volatility forecasting mean squared error (MSE). The optimal values for hyper-parameters in CNN and GRU models selected through RandomizedSearchCV are shown in Table 2.

3 | EMPIRICAL RESULTS

3.1 | The impact of co-movements among China's domestic markets on volatility forecasting for China's stock market

On the one hand, after the signing of closer economic partnership arrangement (CEPA), the bilateral trade between Hong Kong and the mainland of China is very close. On the other hand, with the development of the Shanghai and Shenzhen markets and the guidance of government policies, the co-movements among the three markets in Shanghai, Hong Kong, and Shenzhen have been enhanced. Many scholars have studied the market co-movements between Hong Kong and the mainland of China (Ding & Xu, 2013; Wu & Wang, 2014). Therefore, in this paper, we build a price pattern network for Shanghai, Hong Kong, and Shenzhen markets to depict their time-varying co-movements and discuss the capital circulation and information dissemination among these stock markets. For the Chinese market, we select the closing prices of the SSE Index, Shenzhen Component Index,

1099131x, 2024, 3, Downloaded from https://onlinelibrary.wiley.com/doi/10.1002/for.3049 by Sichuan University, Wiley Online Library on [24/03/2026]. See the Terms and Conditions (https://onlinelibrary.wiley.com/terms-and-conditions) on Wiley Online Library for rules of use; OA articles are governed by the applicable Creative Commons License

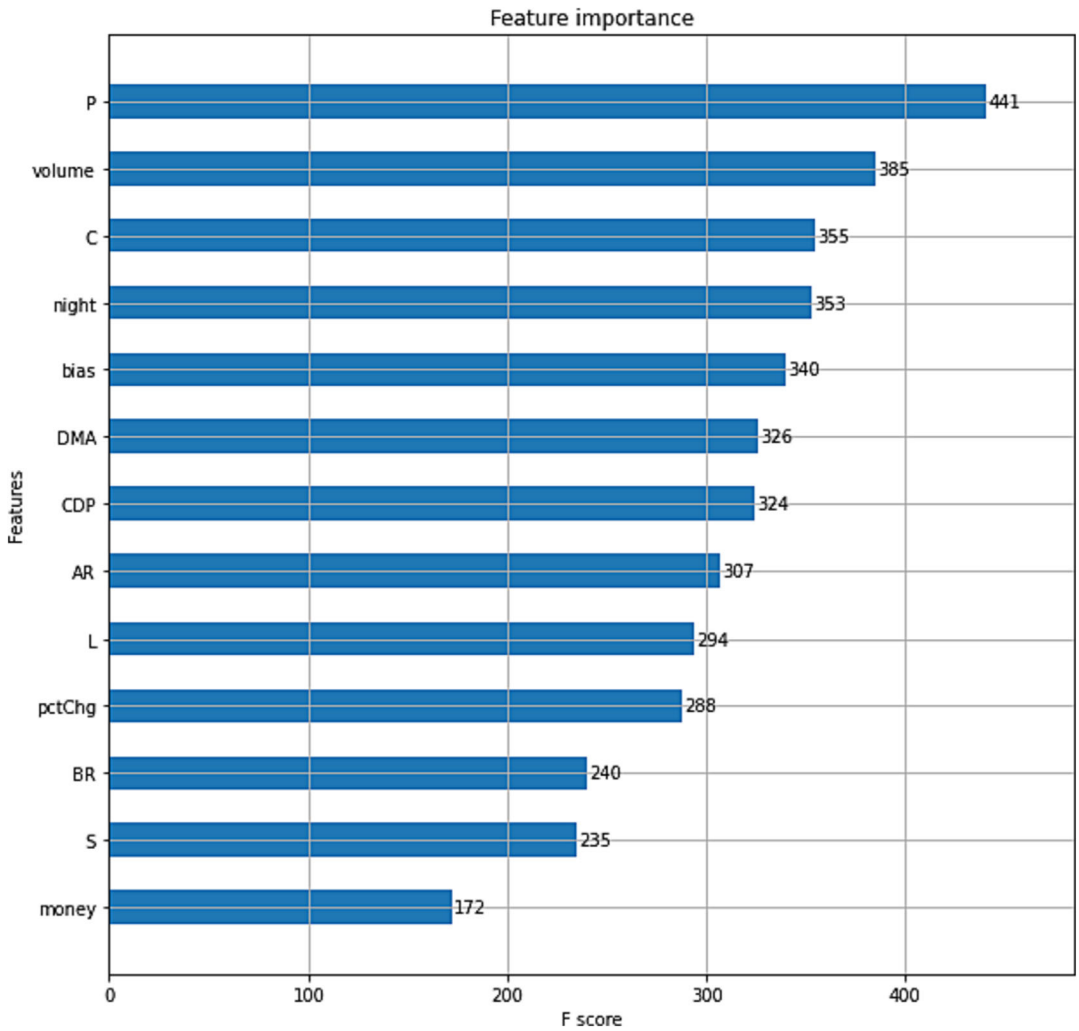

FIGURE 5 Indicator importance results calculated through XGBoost.

and Hang Seng Index in China's domestic stock markets from January 18, 2011, to November 20, 2020, to construct a complex network and calculate the network topology characteristics to add into the indicators system. Moreover, we select a total of 2356 trading days for the SSE Index from March 17, 2011, to November 20, 2020, to forecast the future volatility. The data come from the Wind database (https://www.wind.com.cn/) and the JoinQuant data interface.

(https://www.joinquant.com/).

First, XGBoost (Chen & Guestrin, 2016) is used to calculate the importance of each indicator. XGBoost selects features as segmentation points based on the gain of structure scores, where the importance of features depends on the number of times that they are used as segmentation points. Figure 5 shows the importance and ranking of the indicators for the Chinese market data. Network average degree centrality (P), network closeness centrality (C), and volatility are highly correlated with volatility, ranking in the top three, and the network average shortest path length (L) and average network strength (S) also have greater contributions to volatility, so they can be used as volatility forecasting indicators.

To measure the accuracy of the forecasting results from many aspects, in this paper, we will use six evaluation criteria such as mean absolute error (MAE), MSE, root mean squared error (RMSE), mean absolute percentage error (MAPE), mean squared logarithmic error (MSLE), and symmetric mean absolute percentage error (SMAPE) defined as follows:

$$\mathrm{MAE} = \frac{1}{n}\sum |Y - Y_F|, \tag{21}$$

$$\mathrm{MSE} = \frac{1}{n}\sum (Y - Y_F)^2, \tag{22}$$

$$\mathrm{RMSE} = \sqrt{\frac{1}{n}\sum (Y - Y_F)^2}, \tag{23}$$

1099131x, 2024, 3, Downloaded from https://onlinelibrary.wiley.com/doi/10.1002/for.3049 by Sichuan University, Wiley Online Library on [24/03/2026]. See the Terms and Conditions (https://onlinelibrary.wiley.com/terms-and-conditions) on Wiley Online Library for rules of use; OA articles are governed by the applicable Creative Commons License

TABLE 3 One-step forecasting results for the Chinese market based on the co-movements among China's domestic markets.

Model	Evaluation	MAE	MSE	MSLE	RMSE	MAPE	SMAPE
C + CNN-GRU	Max	0.214	0.129	0.036	0.36	1.584	0.575
	Mean	0.193	0.100	0.029	0.315	1.250	0.664
	Min	0.179	0.082	0.025	0.286	0.978	0.575
CNN-GRU	Max	0.230	0.162	0.037	0.402	1.411	0.702
	Mean	0.206	0.125	0.033	0.353	1.257	0.656
	Min	0.185	0.105	0.029	0.324	1.108	0.585
C + GRU	Max	0.245	0.154	0.041	0.393	1.630	0.764
	Mean	0.23	0.137	0.038	0.370	1.549	0.749
	Min	0.215	0.132	0.037	0.365	1.490	0.653
GRU	Max	0.253	0.154	0.041	0.393	1.606	0.893
	Mean	0.224	0.136	0.038	0.369	1.56	0.806
	Min	0.212	0.112	0.031	0.334	1.452	0.764
C + KNeighbors	Max	0.318	1.167	0.064	1.08	2.550	0.396
	Mean	0.228	0.488	0.045	0.699	1.575	0.945
	Min	0.151	0.139	0.019	0.373	0.987	0.813
Kneighbors	Max	0.357	1.143	0.069	1.072	2.553	0.998
	Mean	0.252	0.599	0.046	0.774	1.811	0.960
	Min	0.208	0.358	0.026	0.598	0.971	0.93
C + SVR	Max	0.333	1.671	0.063	1.293	2.035	0.787
	Mean	0.229	0.613	0.042	0.783	1.357	0.731
	Min	0.172	0.151	0.025	0.388	0.265	0.688
SVR	Max	0.358	1.585	0.071	1.259	2.290	0.992
	Mean	0.245	0.792	0.044	0.890	1.438	0.970
	Min	0.201	0.373	0.025	0.611	0.905	0.924
C + RandomForest	Max	0.311	1.000	0.053	0.999	2.22	0.981
	Mean	0.235	0.466	0.04	0.682	1.476	0.946
	Min	0.162	0.168	0.021	0.410	1.005	0.911
RandomForest	Max	0.309	0.895	0.046	0.346	1.352	0.998
	Mean	0.244	0.530	0.037	0.728	1.450	0.960
	Min	0.216	0.377	0.027	0.614	1.075	0.930
C + GradientBoosting	Max	0.319	0.963	0.053	0.981	2.175	0.696
	Mean	0.248	0.503	0.042	0.705	1.541	0.688
	Min	0.171	0.179	0.021	0.423	1.026	0.678
GradientBoosting	Max	0.339	0.938	0.052	0.969	2.439	0.992
	Mean	0.264	0.591	0.042	0.769	1.524	0.970
	Min	0.226	0.389	0.033	0.624	0.98	0.924
GARCH		0.833	5.045	0.164	2.246	2.036	0.831
ARFIMA		0.426	0.363	0.110	0.932	2.355	1.150
HAR-RV		0.569	0.693	0.125	0.832	1.270	0.717

Note: "C+" means adding the topological characteristics of complex network as forecasting indicators to the basic model.
Abbreviations: CNN, convolutional neural network; GRU, gated recurrent unit; MAE, mean absolute error; MAPE, mean absolute percentage error; MSE, mean squared error; MSLE, mean squared logarithmic error; RMSE, root mean squared error; SMAPE, symmetric mean absolute percentage error.

1099131x, 2024, 3, Downloaded from https://onlinelibrary.wiley.com/doi/10.1002/for.3049 by Sichuan University, Wiley Online Library on [24/03/2026]. See the Terms and Conditions (https://onlinelibrary.wiley.com/terms-and-conditions) on Wiley Online Library for rules of use; OA articles are governed by the applicable Creative Commons License

$$\text{MAPE} = \frac{1}{n}\sum_{i=1}^{n}\left|\frac{Y_F - Y}{Y}\right|, \tag{24}$$

$$\text{MSLE} = \frac{1}{n}\sum(ln(1+Y) - ln(1+Y_F))^2, \tag{25}$$

$$\text{SMAPE} = \frac{1}{n}\sum_{i=1}^{n}\left|\frac{Y_F - Y}{\frac{|Y| + |Y_F|}{2}}\right|, \tag{26}$$

where Y is the true value and Y_F is the forecasting value.

On the basis of the Chinese market data, in this paper, we verify the ability of topological characteristics of the complex network and the CNN-GRU model to improve the volatility forecasting accuracy. Furthermore, the forecasting accuracy of four machine learning models with superior performance such as KNeighbors, SVR, RandomForest, and GradientBoosting, before and after adding topological characteristics of the complex network, and three traditional econometric models such as GARCH, ARFIMA, and HAR-RV is also calculated. To eliminate the experimental bias caused by the randomization for the initial parameters of the machine learning model and the deep learning model, we carry out 10 repeated experiments for each model and take the maximum, minimum, and average values for comparison. Table 3 shows the one-step forecasting error of the Chinese market. From the results in Table 3, the following conclusions can be drawn. (1) On average, the forecasting errors of the machine learning model are smaller than those of the traditional econometric models, which benefits from the nonlinear learning ability of the machine learning models and the addition of the forecasting indicators system. (2) For the Chinese market, RandomForest is the most accurate machine learning model, but the average error of the basic deep learning model GRU is still 22.934% lower than RandomForest (the average of the six evaluation criteria). This is because that the deep learning model has a stronger ability to automatically learn features and the backpropagation. (3) On average, the forecasting accuracy of CNN-GRU is higher than 11.942% of GRU, indicating that the use of CNN to extract features can significantly improve the forecasting ability. (4) After adding the topological characteristics as indicators, the average error of CNN-GRU, GRU, KNeighbors, SVR, RandomForest, and GradientBoosting is reduced by 8.089%, 0.682%, 9.085%, 12.662%, 2.273%, and 9.538%, respectively. It can be explained as the nature of systemic risk in the market is the resonance between stocks, so the co-movement between the symbolic patterns has a greater impact on the volatility.

To compare the forecasting ability among the models, the two-sided DM test is performed on results predicted by each model (Diebold & Mariano, 1995). The null hypothesis of the DM test is that the performance of models A and B is the same in Equation (27),

$$H_0 : MAE_A - MAE_B = 0. \tag{27}$$

When the statistical results are meaningful, the hypothesis is rejected. If the DM test statistical value is positive, the model in the column performs better than the model in the row, and vice versa. The greater the difference between the models is, the greater the absolute value of the statistical value is. The test results are shown in Table 4.

It can be seen from the Table 4 that the DM test statistics of the C + CNN-GRU model, HAR-RV model, and GARCH model are relatively large, indicating that the forecasting ability of the C + CNN-GRU model is significantly better than HAR-RV model and GARCH model. From the rightmost column of data, the DM test statistics of the C + CNN-GRU model and other models are positive, indicating that the forecasting ability of the C + CNN-GRU model is better than all other models, which is consistent with the previous evaluations.

Furthermore, to verify the robustness of the model, this paper also makes the two-step and the five-step forecasting results for the Chinese market, which are depicted in Tables 5 and 6. The results show that the addition of topological characteristics of the complex network in multi-step forecasting can permanently improve the accuracy of volatility forecasting, indicating that the co-movement among stocks can affect volatility in the long term.

Finally, this paper also calculates the mean value of the error reduction ratio under each evaluate criterion after adding the complex network to obtain the reduction rate of the topological characteristics for each forecasting step. Table 7 shows the error reduction ratio of multiple forecasting steps after adding the topological characteristics of complex network. In the one-step, two-step, and five-step forecasting results, the reduction rates of CNN-GRU are 8.089%, 10.940%, and 8.132%, respectively. After adding the topological characteristics, the reduction of the CNN-GRU model is greater than that of other models. It might be because of the powerful feature learning and extraction capabilities of CNN.

1099131x, 2024, 3, Downloaded from https://onlinelibrary.wiley.com/doi/10.1002/for.3049 by Sichuan University, Wiley Online Library on [24/03/2026]. See the Terms and Conditions (https://onlinelibrary.wiley.com/terms-and-conditions) on Wiley Online Library for rules of use; OA articles are governed by the applicable Creative Commons License

TABLE 4 Comparison of DM test results for different models based on the co-movements among China's domestic markets.

	HAR-RV	ARFIMA	GARCH	GradientBoosting	RandomForest	SVR	Kneighbors	GRU	CNN-GRU	C + CNN-GRU
HAR-RV	-	1.783***	2.153***	2.064***	2.617**	3.024**	3.214***	3.574***	4.065**	4.153**
ARFIMA	−1.783***	-	1.568**	1.356**	2.384**	2.915***	3.205**	3.248**	3.642***	3.842**
GARCH	−2.153***	−1.568**	-	1.458***	1.523**	2.315**	2.348***	3.075***	3.215***	3.253***
GradientBoosting	−2.064***	−1.356**	−1.458***	-	1.485***	3.016***	2.035***	2.352**	3.074**	2.764***
RandomForest	−2.617**	−2.384**	−1.523**	−1.485***	-	1.564***	1.653***	2.014**	2.535***	2.126***
SVR	−3.0235**	−2.915***	−2.315**	−3.016***	−1.564***	-	1.026**	1.865**	2.018***	1.935**
Kneighbors	−3.214***	−3.205**	−2.348***	−2.035***	−1.653***	−1.026**	-	1.356**	1.702***	1.733***
GRU	−3.574***	−3.248**	−3.075***	−2.352**	−2.014**	−1.865**	−1.356**	-	1.487**	1.541**
CNN-GRU	−4.065**	−3.642***	−3.215***	−3.074**	−2.535***	−2.018***	−1.702***	−1.487**	-	1.257**
C + CNN-GRU	−4.153**	−3.842**	−3.253***	−2.764***	−2.126***	−1.935**	−1.733***	−1.541**	−1.257**	-

Note: The test data are the residual error of the 1-step forecasting value of each model for the Chinese market.
Abbreviations: CNN, convolutional neural network; GRU, gated recurrent unit.
***$p < 0.001$.**$p < 0.01$.*$p < 0.05$.

1099131x, 2024, 3, Downloaded from https://onlinelibrary.wiley.com/doi/10.1002/for.3049 by Sichuan University, Wiley Online Library on [24/03/2026]. See the Terms and Conditions (https://onlinelibrary.wiley.com/terms-and-conditions) on Wiley Online Library for rules of use; OA articles are governed by the applicable Creative Commons License

TABLE 5 Two-step forecasting results for the Chinese market based on the co-movements among China's domestic markets.

Model	Evaluation	MAE	MSE	MSLE	RMSE	MAPE	SMAPE
C + CNN-GRU	Max	0.205	0.450	0.040	0.671	0.960	0.517
	Mean	0.193	0.357	0.035	0.598	0.925	0.490
	Min	0.177	0.319	0.031	0.565	0.903	0.460
CNN-GRU	Max	0.211	0.493	0.044	0.702	1.068	0.514
	Mean	0.205	0.470	0.040	0.685	1.018	0.497
	Min	0.195	0.433	0.035	0.658	0.934	0.480
C + GRU	Max	0.211	0.403	0.047	0.635	1.000	0.537
	Mean	0.203	0.382	0.042	0.618	0.936	0.496
	Min	0.198	0.360	0.038	0.600	0.893	0.477
GRU	Max	0.223	0.420	0.045	0.648	1.075	0.530
	Mean	0.204	0.392	0.043	0.626	0.996	0.513
	Min	0.203	0.388	0.041	0.623	0.868	0.505
C + KNeighbors	Max	0.347	0.915	0.081	0.957	2.900	0.724
	Mean	0.264	0.516	0.055	0.718	1.829	0.655
	Min	0.198	0.180	0.035	0.424	1.171	0.597
Kneighbors	Max	0.332	1.144	0.071	1.070	2.818	0.748
	Mean	0.295	0.671	0.053	0.819	1.326	0.702
	Min	0.257	0.228	0.014	0.573	1.240	0.646
C + SVR	Max	0.357	1.194	0.090	1.093	1.929	0.713
	Mean	0.258	0.634	0.055	0.797	1.416	0.634
	Min	0.192	0.235	0.032	0.485	1.008	0.602
SVR	Max	0.343	1.461	0.021	1.208	2.031	0.664
	Mean	0.268	0.776	0.057	0.811	1.289	0.633
	Min	0.240	0.328	0.034	0.573	0.948	0.598
C + RandomForest	Max	0.372	1.067	0.082	1.033	2.379	0.750
	Mean	0.277	0.528	0.057	0.727	1.734	0.691
	Min	0.224	0.213	0.043	0.462	1.193	0.651
RandomForest	Max	0.318	0.854	0.061	0.925	2.305	0.721
	Mean	0.283	0.542	0.057	0.736	1.711	0.699
	Min	0.232	0.215	0.038	0.484	1.197	0.666
C + GradientBoosting	Max	0.369	1.102	0.084	1.050	2.462	0.782
	Mean	0.283	0.566	0.060	0.753	1.806	0.703
	Min	0.232	0.242	0.044	0.492	1.124	0.671
GradientBoosting	Max	0.328	0.964	0.065	0.982	2.286	0.763
	Mean	0.288	0.587	0.056	0.766	1.667	0.714
	Min	0.240	0.278	0.400	0.527	1.218	0.685
GARCH		0.869	1.983	0.158	1.408	2.063	0.837
ARFIMA		0.458	0.834	0.080	0.913	1.231	0.798
HAR-RV		0.419	0.409	0.078	0.639	1.123	0.640

Note: "C+" means adding the topological characteristics of complex network as forecasting indicators to the basic model.
Abbreviations: CNN, convolutional neural network; GRU, gated recurrent unit; MAE, mean absolute error; MAPE, mean absolute percentage error; MSE, mean squared error; MSLE, mean squared logarithmic error; RMSE, root mean squared error; SMAPE, symmetric mean absolute percentage error.

1099131x, 2024, 3, Downloaded from https://onlinelibrary.wiley.com/doi/10.1002/for.3049 by Sichuan University, Wiley Online Library on [24/03/2026]. See the Terms and Conditions (https://onlinelibrary.wiley.com/terms-and-conditions) on Wiley Online Library for rules of use; OA articles are governed by the applicable Creative Commons License

TABLE 6 Five-step forecasting results for the Chinese market based on the co-movements among China's domestic markets.

Model	Evaluation	MAE	MSE	MSLE	RMSE	MAPE	SMAPE
C + CNN-GRU	Max	0.183	0.541	0.026	0.735	1.717	0.575
	Mean	0.176	0.478	0.025	0.691	1.580	0.566
	Min	0.171	0.387	0.024	0.622	1.431	0.559
CNN-GRU	Max	0.192	0.714	0.031	0.845	1.750	0.582
	Mean	0.183	0.620	0.027	0.788	1.618	0.566
	Min	0.177	0.543	0.025	0.737	1.480	0.558
C + GRU	Max	0.230	0.568	0.050	0.754	1.783	0.544
	Mean	0.204	0.492	0.032	0.702	1.645	0.577
	Min	0.199	0.468	0.031	0.684	1.544	0.570
GRU	Max	0.238	0.584	0.057	0.764	1.780	0.598
	Mean	0.233	0.527	0.055	0.726	1.704	0.580
	Min	0.227	0.476	0.053	0.690	1.704	0.580
C + KNeighbors	Max	0.344	1.095	0.079	1.047	2.244	0.742
	Mean	0.300	0.774	0.066	0.880	1.641	0.708
	Min	0.265	0.402	0.056	0.634	1.211	0.664
Kneighbors	Max	0.346	1.027	0.083	1.013	2.729	0.764
	Mean	0.292	0.674	0.085	0.821	2.012	0.722
	Min	0.247	0.272	0.050	0.521	1.434	0.669
C + SVR	Max	0.353	1.484	0.085	1.218	1.811	0.719
	Mean	0.296	0.971	0.070	0.985	1.480	0.664
	Min	0.256	0.543	0.059	0.737	1.041	0.606
SVR	Max	0.329	1.195	0.079	1.089	2.305	0.711
	Mean	0.273	0.743	0.085	0.619	1.708	0.669
	Min	0.250	0.328	0.047	0.573	1.156	0.633
C + RandomForest	Max	0.354	1.053	0.075	1.026	2.575	0.787
	Mean	0.306	0.703	0.060	0.838	1.806	0.733
	Min	0.263	0.321	0.051	0.566	1.175	0.705
RandomForest	Max	0.327	0.800	0.070	0.942	2.977	0.793
	Mean	0.289	0.593	0.085	0.764	2.130	0.744
	Min	0.255	0.329	0.047	0.573	1.924	0.712
C + GradientBoosting	Max	0.368	1.232	0.083	1.110	2.484	0.773
	Mean	0.308	0.753	0.063	0.868	1.746	0.720
	Min	0.273	0.373	0.055	0.611	1.229	0.685
GradientBoosting	Max	0.353	0.918	0.077	0.957	3.013	0.807
	Mean	0.291	0.648	0.061	0.805	2.006	0.728
	Min	0.250	0.361	0.046	0.601	1.248	0.691
GARCH		0.869	1.983	0.158	1.408	2.063	0.837
ARFIMA		0.457	0.838	0.079	0.915	1.973	1.230
HAR-RV		0.555	0.621	0.127	0.788	1.556	0.779

Note: "C+" means adding the topological characteristics of complex network as forecasting indicators to the basic model.
Abbreviations: CNN, convolutional neural network; GRU, gated recurrent unit; MAE, mean absolute error; MAPE, mean absolute percentage error; MSE, mean squared error; MSLE, mean squared logarithmic error; RMSE, root mean squared error; SMAPE, symmetric mean absolute percentage error.

1099131x, 2024, 3, Downloaded from https://onlinelibrary.wiley.com/doi/10.1002/for.3049 by Sichuan University, Wiley Online Library on [24/03/2026]. See the Terms and Conditions (https://onlinelibrary.wiley.com/terms-and-conditions) on Wiley Online Library for rules of use; OA articles are governed by the applicable Creative Commons License

TABLE 7 Model reduction rates for China market based on the co-movements among China's domestic markets.

	1 step	2 steps	5 steps
CNN-GRU	8.089%	10.940%	8.132%
GRU	0.682%	2.664%	1.365%
Kneighbors	9.085%	1.821%	2.995%
SVR	12.662%	2.876%	−1.083%
RandomForest	2.273%	0.954%	1.997%
GradientBoosting	9.538%	−1.155%	−3.182%

Abbreviations: CNN, convolutional neural network; GRU, gated recurrent unit.

3.2 | The impact of co-movements among international stock markets on volatility forecasting for China's and US's stock market

With the impact of global economic integration and trade liberalization, the co-movement between China and the global stock market cannot be ignored. On the one hand, China has close trade relations with other countries, and the real economy is closely related. On the other hand, the governments of all countries have relaxed the control of capital flows and accelerated the global economic and financial integration. The United States is the largest economy in the world, and its financial environment has affected the international capital flow in China's financial market. Especially, after the People's Bank of China officially implemented QDII in 2006, the volatility spillover effect of China's market and the US stock market is relatively significant (Yang et al., 2020; Yang & Zhou, 2018; Zhang et al., 2010). Meanwhile, acting as the bridge between the financial market in the mainland of China and the international financial market, the financial market in Hong Kong with its highly liquid capital and complete trading system provides financing opportunities for many international enterprises. The "Shanghai-Hong Kong Stock Connect program" and "Shenzhen-Hong Kong Stock Connect program" are interconnected mechanisms for transactions, which promotes the inflow of international financial capital into the A-share market. Therefore, it is of great significance to study the co-movement among the markets in Hong Kong, in the mainland of China, and in the United States in order to analyze the impact of international financial market integration on China's stock market.

This paper further constructs the price pattern network of SSE Index, Hang Seng Index, and S&P500 and forecasts the future volatility of SSE Index and S&P500 based on the topological characteristics of the network. The prediction results of the SSE Index reveal the impact of the co-movements of the securities markets of the United States, Hong Kong, and the mainland of China on the Chinese stock market, and the prediction results of the S&P500 indicate the impact of the co-movements on the volatility of the US market. Table 8 shows the one-step volatility forecasting results of the models on the SSE Index before and after adding the topological characteristics. It can be found that (1) on average, the forecasting error of CNN-GRU is lower than that of GRU and other models. (2) After adding the topological characteristics through the price pattern of the markets in the mainland of China, Hong Kong, and the United States into the model for the Chinese market, the average error of CNN-GRU, GRU, KNeighbors, SVR, RandomForest, and GradientBoosting decreased by 20.627%, 4.256%, 8.928%, 1.076%, 9.116%, and 7.615%, respectively, which indicates that the co-movements of the international stock market have a significant impact on the volatility of the Chinese stock market. After considering the co-movements of the international stock market, the prediction error of CNN-GRU decreased by the largest margin as 20.627%, whereas the prediction error of GRU decreased by only 4.256%. This result strongly demonstrates the necessity of adding CNN structure to the GRU model to extract the spatial dependence between topological feature variables and other transaction variables. (3) Although the forecasting accuracy of the classical machine learning model has also been greatly improved, the prediction error is far greater than that of the deep learning models CNN-GRU and GRU, which benefits from the stronger fitting ability of the nested deep network structure and the optimization ability of the back propagation technology for parameter estimation.

Tables 9 and 10 show the errors of two-step prediction and five-step volatility prediction of the Chinese market. The multi-step prediction results are similar to the one-step prediction results. With the increase of the prediction step, the prediction error of the model shows an upward trend.

Tables 11–13 show the one-step and multi-step volatility forecasting error results for the US market. It can be found that the volatility prediction results of S&P500 in the US market are similar to those in the Chinese market. The average error of CNN-GRU model decreased by 8.673%, 18.745%, and 13.065% respectively, after adding topological features to the one-step, two-step, and five-step prediction models. The topological characteristics of the price pattern network of SSE Index, Hang Seng Index, and S&P500 can forecast the volatility of S&P500 to some extent.

Furthermore, we will horizontally analyze the difference in the volatility forecasting ability of the US and China markets based on the network topology

1099131x, 2024, 3, Downloaded from https://onlinelibrary.wiley.com/doi/10.1002/for.3049 by Sichuan University, Wiley Online Library on [24/03/2026]. See the Terms and Conditions (https://onlinelibrary.wiley.com/terms-and-conditions) on Wiley Online Library for rules of use; OA articles are governed by the applicable Creative Commons License

TABLE 8 One-step forecasting results for the China market based on the co-movements among international stock markets.

Model	Evaluation	MAE	MSE	MSLE	RMSE	MAPE	SMAPE
C + CNN-GRU	Max	0.2182	0.3228	0.0464	0.5681	1.0134	0.5567
	Mean	0.2162	0.3040	0.0432	0.5512	0.9695	0.5469
	Min	0.2135	0.2813	0.0393	0.5304	0.9112	0.5404
CNN-GRU	Max	0.2634	0.8499	0.0546	0.9219	0.9917	0.5293
	Mean	0.2550	0.8292	0.0493	0.9105	0.9744	0.5105
	Min	0.2452	0.7927	0.0454	0.8903	0.9356	0.4924
C + GRU	Max	0.2709	0.8957	0.0556	0.9464	1.4214	0.5943
	Mean	0.2619	0.8208	0.0520	0.9060	1.2018	0.5422
	Min	0.2514	0.7815	0.0471	0.8840	1.0703	0.5101
GRU	Max	0.2727	0.9277	0.0568	0.9632	1.6475	0.6103
	Mean	0.2689	0.8443	0.0536	0.9189	1.3140	0.5844
	Min	0.2522	0.8263	0.0483	0.9090	1.1188	0.5441
C + KNeighbors	Max	0.2919	0.7480	0.0638	0.8648	2.8659	0.6689
	Mean	0.2519	0.4789	0.0475	0.6920	1.9890	0.6393
	Min	0.2026	0.2044	0.0372	0.4521	1.4622	0.6076
Kneighbors	Max	0.3144	0.9865	0.0616	0.9932	2.4499	0.7250
	Mean	0.2632	0.5206	0.0498	0.7215	2.7792	0.6668
	Min	0.2050	0.2149	0.0401	0.4636	1.0150	0.6161
C + SVR	Max	0.3087	1.0288	0.0654	1.0143	2.4049	0.6481
	Mean	0.2610	0.6975	0.0517	0.8351	1.6559	0.6281
	Min	0.2155	0.3252	0.0359	0.5702	1.2373	0.6127
SVR	Max	0.3158	1.1888	0.0612	1.0903	2.7866	0.6783
	Mean	0.2564	0.6660	0.0492	0.8161	2.1103	0.6210
	Min	0.1955	0.2474	0.0363	0.4974	1.0182	0.5595
C + RandomForest	Max	0.2905	0.7755	0.0589	0.8806	2.5115	0.7009
	Mean	0.2506	0.4400	0.0448	0.6634	1.8728	0.6730
	Min	0.1963	0.1564	0.0285	0.3955	1.4268	0.6340
RandomForest	Max	0.3396	1.0392	0.0637	1.0194	3.5516	0.7214
	Mean	0.2619	0.4860	0.0475	0.6971	2.5856	0.6926
	Min	0.2138	0.2032	0.0331	0.4508	1.2316	0.6640
C + GradientBoosting	Max	0.3052	0.7135	0.0622	0.8447	3.8181	0.6996
	Mean	0.2577	0.4446	0.0450	0.6668	1.9167	0.6683
	Min	0.2078	0.1920	0.0309	0.4381	1.2243	0.6462
GradientBoosting	Max	0.3484	1.0397	0.0664	1.0196	3.3137	0.7193
	Mean	0.2642	0.4944	0.0455	0.7031	2.5939	0.6736
	Min	0.1994	0.1979	0.0316	0.4449	1.1066	0.6350
GARCH		0.9351	0.9508	0.1876	0.9751	2.0902	0.8406
ARFIMA		0.4591	0.8499	0.0821	0.9219	2.4217	1.2307
HAR-RV		0.4247	0.9274	0.0822	0.9630	1.1345	0.8433

Note: "C+" means adding the topological characteristics of complex network as forecasting indicators to the basic model.
Abbreviations: CNN, convolutional neural network; GRU, gated recurrent unit; MAE, mean absolute error; MAPE, mean absolute percentage error; MSE, mean squared error; MSLE, mean squared logarithmic error; RMSE, root mean squared error; SMAPE, symmetric mean absolute percentage error.

1099131x, 2024, 3, Downloaded from https://onlinelibrary.wiley.com/doi/10.1002/for.3049 by Sichuan University, Wiley Online Library on [24/03/2026]. See the Terms and Conditions (https://onlinelibrary.wiley.com/terms-and-conditions) on Wiley Online Library for rules of use; OA articles are governed by the applicable Creative Commons License

TABLE 9 Two-step forecasting results for the China market based on the co-movements among international stock markets.

Model	Evaluation	MAE	MSE	MSLE	RMSE	MAPE	SMAPE
C + CNN-GRU	Max	0.2211	0.3222	0.0460	0.5676	0.9320	0.5568
	Mean	0.2147	0.2920	0.0432	0.5400	0.9020	0.5429
	Min	0.2105	0.2738	0.0403	0.5233	0.8532	0.5351
CNN-GRU	Max	0.2302	0.3451	0.0475	0.5874	1.6586	0.5618
	Mean	0.2176	0.3347	0.0454	0.5785	1.4204	0.5482
	Min	0.2105	0.3139	0.0424	0.5603	1.2515	0.5416
C + GRU	Max	0.2953	0.9314	0.0584	0.9651	1.8102	0.6012
	Mean	0.2797	0.9115	0.0476	0.9547	1.5332	0.5774
	Min	0.2628	0.8845	0.0463	0.9405	1.2287	0.5514
GRU	Max	0.2998	0.9738	0.0593	0.9868	1.9971	0.6213
	Mean	0.2881	0.9384	0.0543	0.9687	1.6774	0.5944
	Min	0.2673	0.9012	0.0512	0.9493	1.4948	0.5621
C + KNeighbors	Max	0.3701	1.1950	0.0707	1.0931	3.9484	0.7524
	Mean	0.2770	0.5973	0.0565	0.7729	2.3768	0.6831
	Min	0.2192	0.3189	0.0396	0.5647	1.5057	0.6125
Kneighbors	Max	0.3620	1.2023	0.0794	1.0965	3.3958	0.7386
	Mean	0.3121	0.7813	0.0699	0.8839	2.6381	0.7128
	Min	0.2721	0.3498	0.0608	0.5914	1.6729	0.6852
C + SVR	Max	0.3562	1.6298	0.0767	1.2766	2.5724	0.6907
	Mean	0.2595	0.7014	0.0539	0.8375	1.8902	0.6427
	Min	0.2119	0.3203	0.0400	0.5659	1.1976	0.5938
SVR	Max	0.3313	1.4789	0.0768	1.2161	3.4984	0.6586
	Mean	0.2830	0.8904	0.0652	0.9436	2.0868	0.6402
	Min	0.2224	0.3560	0.0505	0.5967	1.3444	0.6184
C + RandomForest	Max	0.3721	1.2841	0.0716	1.1332	3.4748	0.7848
	Mean	0.2850	0.6147	0.0570	0.7841	2.1593	0.7185
	Min	0.2260	0.3462	0.0386	0.5884	1.2195	0.6910
RandomForest	Max	0.3721	1.0808	0.0789	1.0396	3.9910	0.7535
	Mean	0.3030	0.7314	0.0642	0.8552	2.6329	0.7109
	Min	0.2618	0.3190	0.0536	0.5648	1.4578	0.6631
C + GradientBoosting	Max	0.3720	1.2854	0.0755	1.1337	2.6491	0.7765
	Mean	0.2856	0.6223	0.0570	0.7889	2.1427	0.7173
	Min	0.2394	0.2868	0.0441	0.5356	1.2678	0.6563
GradientBoosting	Max	0.3767	1.0532	0.0839	1.0263	3.5062	0.7566
	Mean	0.3066	0.7581	0.0665	0.8707	2.3626	0.7123
	Min	0.2605	0.3595	0.0559	0.5996	1.5989	0.6663
GARCH		0.9703	0.9703	0.2566	1.4752	2.5628	0.9373
ARFIMA		0.5472	0.9919	0.0986	1.0910	2.6747	1.4731
HAR-RV		0.5238	0.9133	0.0932	0.9557	2.1341	0.9136

Note: "C+" means adding the topological characteristics of complex network as forecasting indicators to the basic model.
Abbreviations: CNN, convolutional neural network; GRU, gated recurrent unit; MAE, mean absolute error; MAPE, mean absolute percentage error; MSE, mean squared error; MSLE, mean squared logarithmic error; RMSE, root mean squared error; SMAPE, symmetric mean absolute percentage error.

1099131x, 2024, 3, Downloaded from https://onlinelibrary.wiley.com/doi/10.1002/for.3049 by Sichuan University, Wiley Online Library on [24/03/2026]. See the Terms and Conditions (https://onlinelibrary.wiley.com/terms-and-conditions) on Wiley Online Library for rules of use; OA articles are governed by the applicable Creative Commons License

TABLE 10 Five-step forecasting results for the China market based on the co-movements among international stock markets.

Model	Evaluation	MAE	MSE	MSLE	RMSE	MAPE	SMAPE
C + CNN-GRU	Max	0.2256	0.3205	0.0488	0.5661	0.9435	0.5952
	Mean	0.2221	0.2972	0.0447	0.5450	0.8988	0.5826
	Min	0.2199	0.2853	0.0424	0.5341	0.8451	0.5692
CNN-GRU	Max	0.2423	0.4453	0.0474	0.6673	1.4447	0.6574
	Mean	0.2278	0.3546	0.0399	0.5932	1.3596	0.6293
	Min	0.2099	0.2802	0.0338	0.5294	1.2872	0.6075
C + GRU	Max	0.3027	0.9789	0.0512	0.9894	1.8977	0.7142
	Mean	0.2854	0.9580	0.0473	0.9788	1.6415	0.6221
	Min	0.2698	0.9353	0.0327	0.9671	1.4112	0.6074
GRU	Max	0.3112	1.0581	0.0581	1.0286	2.1084	0.7914
	Mean	0.2931	0.9684	0.0499	0.9841	1.8846	0.6247
	Min	0.2773	0.9295	0.0298	0.9641	1.6478	0.5872
C + KNeighbors	Max	0.3605	1.4186	0.0740	1.1910	3.3681	0.7818
	Mean	0.2786	0.6977	0.0554	0.8353	3.2752	0.7005
	Min	0.2007	0.2011	0.0402	0.4484	1.1773	0.6387
Kneighbors	Max	0.3494	1.1805	0.0757	1.0865	4.1644	0.7772
	Mean	0.2959	0.6468	0.0602	0.8042	3.1087	0.7439
	Min	0.2423	0.2638	0.0455	0.5136	1.6848	0.7147
C + SVR	Max	0.3803	1.9551	0.0893	1.3983	2.8271	0.7238
	Mean	0.2710	0.8213	0.0575	0.9062	2.4760	0.6595
	Min	0.1840	0.1735	0.0326	0.4165	1.1278	0.5849
SVR	Max	0.3501	1.4154	0.0818	1.1897	4.9621	0.7265
	Mean	0.2817	0.7580	0.0628	0.8706	2.5776	0.6824
	Min	0.2174	0.2474	0.0460	0.4974	1.2775	0.6394
C + RandomForest	Max	0.3416	1.1098	0.0672	1.0535	3.0477	0.7856
	Mean	0.2882	0.6052	0.0539	0.7779	2.4057	0.7295
	Min	0.2198	0.2138	0.0389	0.4624	1.3141	0.6753
RandomForest	Max	0.3422	0.8216	0.0728	0.9064	4.8037	0.7944
	Mean	0.3055	0.5599	0.0608	0.7483	2.8895	0.7677
	Min	0.2652	0.3045	0.0486	0.5518	1.5727	0.7314
C + GradientBoosting	Max	0.3498	1.1998	0.0673	1.0954	9.1395	0.7944
	Mean	0.2908	0.6260	0.0539	0.7912	3.0506	0.7310
	Min	0.2079	0.1791	0.0363	0.4232	1.2775	0.6583
GradientBoosting	Max	0.3540	0.9353	0.0708	0.9671	4.0669	0.7930
	Mean	0.3017	0.6026	0.0595	0.7763	2.8616	0.7548
	Min	0.2463	0.2869	0.0453	0.5356	1.5121	0.7235
GARCH		0.9997	1.2684	0.2588	1.5433	2.5950	0.9632
ARFIMA		0.6396	1.1652	0.1160	1.2772	2.9210	1.7161
HAR-RV		0.6819	1.1319	0.1223	1.0639	2.0932	1.3976

Note: "C+" means adding the topological characteristics of complex network as forecasting indicators to the basic model.
Abbreviations: CNN, convolutional neural network; GRU, gated recurrent unit; MAE, mean absolute error; MAPE, mean absolute percentage error; MSE, mean squared error; MSLE, mean squared logarithmic error; RMSE, root mean squared error; SMAPE, symmetric mean absolute percentage error.

1099131x, 2024, 3, Downloaded from https://onlinelibrary.wiley.com/doi/10.1002/for.3049 by Sichuan University, Wiley Online Library on [24/03/2026]. See the Terms and Conditions (https://onlinelibrary.wiley.com/terms-and-conditions) on Wiley Online Library for rules of use; OA articles are governed by the applicable Creative Commons License

TABLE 11 One-step forecasting results for the US market based on the co-movements among international stock markets.

Model	Evaluation	MAE	MSE	MSLE	RMSE	MAPE	SMAPE
C + CNN-GRU	Max	0.1471	0.1509	0.0227	0.3884	1.325175	0.6691
	Mean	0.1451	0.1236	0.0209	0.3502	1.156729	0.6489
	Min	0.1436	0.0997	0.0187	0.3157	0.97402	0.6372
CNN-GRU	Max	0.1551	0.2200	0.0225	0.4691	1.4942	0.6593
	Mean	0.1486	0.1655	0.0215	0.4068	1.2847	0.6343
	Min	0.1435	0.1356	0.0200	0.3682	1.0212	0.6122
C + GRU	Max	0.1761	0.4671	0.0288	0.6834	1.9470	0.6843
	Mean	0.1671	0.3164	0.0264	0.6625	1.5852	0.6651
	Min	0.1600	0.2214	0.0201	0.4705	1.3451	0.6314
GRU	Max	0.1964	0.5714	0.0312	0.7559	2.1021	0.6915
	Mean	0.1823	0.4611	0.0272	0.6790	1.6684	0.6541
	Min	0.1624	0.3381	0.0249	0.5815	1.2018	0.6410
C + KNeighbors	Max	0.2692	1.0534	0.0634	1.0264	2.6426	0.7558
	Mean	0.2247	0.7278	0.0482	0.8531	1.6769	0.7044
	Min	0.1828	0.2138	0.0360	0.4624	1.1091	0.6470
Kneighbors	Max	0.2514	1.6289	0.0565	1.2763	4.3785	0.7650
	Mean	0.1829	0.3500	0.0337	0.5916	3.6393	0.7383
	Min	0.1490	0.1211	0.0221	0.3480	1.0388	0.7010
C + SVR	Max	0.2819	1.2962	0.0690	1.1385	2.1359	0.7996
	Mean	0.2317	0.8725	0.0506	0.9341	2.8790	0.7404
	Min	0.1937	0.3115	0.0364	0.5581	1.0610	0.7043
SVR	Max	0.2629	1.7626	0.0585	1.3276	2.9664	0.7670
	Mean	0.1823	0.4125	0.0338	0.6423	2.7411	0.7252
	Min	0.1405	0.0715	0.0193	0.2674	1.0270	0.6913
C + RandomForest	Max	0.2807	0.8571	0.0586	0.9258	1.4265	0.7715
	Mean	0.2312	0.6741	0.0465	0.8210	1.2661	0.7335
	Min	0.1874	0.2444	0.0340	0.4944	1.1989	0.6782
RandomForest	Max	0.2626	1.5552	0.0504	1.2471	4.4153	0.7717
	Mean	0.1938	0.3938	0.0346	0.6276	3.4930	0.7343
	Min	0.1595	0.1515	0.0243	0.3893	1.1577	0.6749
C + GradientBoosting	Max	0.2810	0.8446	0.0657	0.9190	2.3401	0.7707
	Mean	0.2389	0.7380	0.0467	0.8591	1.5336	0.7354
	Min	0.1831	0.2331	0.0313	0.4828	1.0823	0.6685
GradientBoosting	Max	0.2641	1.6134	0.0490	1.2702	4.3406	0.7514
	Mean	0.1988	0.4303	0.0353	0.6560	3.7928	0.7164
	Min	0.1482	0.1217	0.0238	0.3489	1.1057	0.6511
GARCH		0.8328	0.9918	0.3213	0.9959	4.2319	1.7847
ARFIMA		0.5319	0.7453	0.1373	0.8633	4.1986	1.2972
HAR-RV		0.8229	0.8998	0.4646	0.9486	3.1411	1.2199

Note: "C+" means adding the topological characteristics of complex network as forecasting indicators to the basic model.
Abbreviations: CNN, convolutional neural network; GRU, gated recurrent unit; MAE, mean absolute error; MAPE, mean absolute percentage error; MSE, mean squared error; MSLE, mean squared logarithmic error; RMSE, root mean squared error; SMAPE, symmetric mean absolute percentage error.

1099131x, 2024, 3, Downloaded from https://onlinelibrary.wiley.com/doi/10.1002/for.3049 by Sichuan University, Wiley Online Library on [24/03/2026]. See the Terms and Conditions (https://onlinelibrary.wiley.com/terms-and-conditions) on Wiley Online Library for rules of use; OA articles are governed by the applicable Creative Commons License

TABLE 12 Two-step forecasting results for the US market based on the co-movements among international stock markets.

Model	Evaluation	MAE	MSE	MSLE	RMSE	MAPE	SMAPE
C + CNN-GRU	Max	0.1785	0.1680	0.0348	0.4099	1.2213	0.6987
	Mean	0.1705	0.1615	0.0300	0.4018	1.1679	0.6566
	Min	0.1662	0.1533	0.0271	0.3915	1.0652	0.6140
CNN-GRU	Max	0.2159	0.3704	0.0723	0.6086	1.9292	0.7288
	Mean	0.1963	0.2617	0.0487	0.5116	1.1271	0.6897
	Min	0.1874	0.2217	0.0411	0.4709	1.5341	0.6670
C + GRU	Max	0.2219	0.2684	0.0512	0.5181	4.9213	0.7641
	Mean	0.2101	0.2549	0.0497	0.5049	4.3718	0.7120
	Min	0.1884	0.2375	0.0435	0.4873	4.2041	0.6811
GRU	Max	0.2485	0.2814	0.0564	0.5305	5.0040	0.7951
	Mean	0.2312	0.2659	0.0521	0.5157	4.5841	0.7514
	Min	0.2082	0.2387	0.0488	0.4886	4.5182	0.7012
C + KNeighbors	Max	0.3263	1.4170	0.0756	1.1904	4.6931	0.8048
	Mean	0.2388	1.0064	0.0537	1.0032	2.5440	0.7549
	Min	0.1654	0.1647	0.0296	0.4059	1.3346	0.7110
Kneighbors	Max	0.3151	1.4250	0.0943	1.1937	4.7605	0.8376
	Mean	0.2523	0.7117	0.0619	0.8436	9.1224	0.8003
	Min	0.1909	0.1525	0.0349	0.3905	1.7931	0.7408
C + SVR	Max	0.3237	1.5656	0.0793	1.2512	3.7846	0.8222
	Mean	0.2363	1.0769	0.0543	1.0377	2.0393	0.7599
	Min	0.1614	0.1316	0.0281	0.3627	1.1572	0.7021
SVR	Max	0.2835	1.4635	0.0764	1.2097	4.3072	0.7650
	Mean	0.2287	0.7482	0.0531	0.8650	2.3559	0.7378
	Min	0.1755	0.1909	0.0335	0.4369	0.9960	0.6578
C + RandomForest	Max	0.3458	1.3273	0.0884	1.1521	4.4714	0.8586
	Mean	0.2664	1.0762	0.0616	1.0374	2.7205	0.7738
	Min	0.1850	0.1872	0.0389	0.4327	1.5096	0.7045
RandomForest	Max	0.2932	1.2194	0.0688	1.1043	5.1523	0.7938
	Mean	0.2391	0.6286	0.0507	0.7928	3.1473	0.7661
	Min	0.1823	0.2030	0.0358	0.4506	1.5843	0.6989
C + GradientBoosting	Max	0.3287	1.2721	0.0853	1.1279	4.3088	0.8586
	Mean	0.2690	1.1661	0.0600	1.0799	2.9077	0.7544
	Min	0.1840	0.2166	0.0344	0.4654	1.4086	0.6938
GradientBoosting	Max	0.3089	1.3626	0.0752	1.1673	4.7507	0.7835
	Mean	0.2518	0.7235	0.0521	0.8506	3.3373	0.7581
	Min	0.1980	0.2004	0.0362	0.4477	1.4048	0.7283
GARCH		0.9492	1.2838	0.4563	1.1331	5.2428	1.8996
ARFIMA		0.5755	0.5948	0.2649	0.7712	5.0746	1.2859
HAR-RV		0.5423	0.5234	0.2943	0.7235	5.0748	1.2435

Note: "C+" means adding the topological characteristics of complex network as forecasting indicators to the basic model.
Abbreviations: CNN, convolutional neural network; GRU, gated recurrent unit; MAE, mean absolute error; MAPE, mean absolute percentage error; MSE, mean squared error; MSLE, mean squared logarithmic error; RMSE, root mean squared error; SMAPE, symmetric mean absolute percentage error.

1099131x, 2024, 3, Downloaded from https://onlinelibrary.wiley.com/doi/10.1002/for.3049 by Sichuan University, Wiley Online Library on [24/03/2026]. See the Terms and Conditions (https://onlinelibrary.wiley.com/terms-and-conditions) on Wiley Online Library for rules of use; OA articles are governed by the applicable Creative Commons License

TABLE 13 Five-step forecasting results for the US market based on the co-movements among international stock markets.

Model	Evaluation	MAE	MSE	MSLE	RMSE	MAPE	SMAPE
C + CNN-GRU	Max	0.1956	0.1781	0.0447	0.4220	1.4912	0.6337
	Mean	0.1954	0.1730	0.0363	0.4160	1.4884	0.6136
	Min	0.1773	0.1699	0.0328	0.4122	1.0175	0.6006
CNN-GRU	Max	0.2128	0.3278	0.0535	0.5726	1.7058	0.7098
	Mean	0.2060	0.2829	0.0408	0.5319	1.5063	0.6160
	Min	0.2016	0.2517	0.0372	0.5017	1.4892	0.6083
C + GRU	Max	0.2412	0.4415	0.0588	0.6645	1.9214	0.6914
	Mean	0.2109	0.3715	0.0541	0.6095	1.7381	0.6515
	Min	0.1994	0.3661	0.0418	0.6051	1.5248	0.5886
GRU	Max	0.2501	0.4891	0.0604	0.6994	2.1031	0.6851
	Mean	0.2217	0.4061	0.0578	0.6373	1.8649	0.6418
	Min	0.2081	0.3871	0.0446	0.6222	1.6664	0.6132
C + KNeighbors	Max	0.4151	1.8800	0.1260	1.3711	5.8876	0.8822
	Mean	0.2681	1.2156	0.0654	1.1025	2.5873	0.8027
	Min	0.2003	0.3280	0.0383	0.5727	1.5113	0.7385
Kneighbors	Max	0.4440	1.8600	0.1191	1.3638	6.9952	0.8970
	Mean	0.2890	1.3812	0.0705	1.1753	2.8291	0.8499
	Min	0.2148	0.2732	0.0435	0.5227	1.4403	0.7933
C + SVR	Max	0.4157	2.0835	0.1250	1.4434	5.3985	0.8546
	Mean	0.2575	1.3232	0.0655	1.1503	2.4444	0.7942
	Min	0.1653	0.1525	0.0313	0.3906	1.3226	0.6920
SVR	Max	0.4302	2.2035	0.1117	1.4844	2.7817	0.7972
	Mean	0.2560	1.4071	0.0609	1.1862	1.8597	0.7691
	Min	0.1833	0.1887	0.0358	0.4344	1.0641	0.7275
C + RandomForest	Max	0.4439	1.9208	0.1199	1.3859	7.3839	0.8991
	Mean	0.2831	1.2898	0.0668	1.1357	3.2566	0.8476
	Min	0.2092	0.2380	0.0371	0.4879	1.6191	0.8058
RandomForest	Max	0.4552	1.8896	0.1137	1.3746	3.2125	0.9521
	Mean	0.3034	1.4255	0.0730	1.1940	2.3276	0.8723
	Min	0.2200	0.3054	0.0458	0.5526	1.5274	0.8041
C + GradientBoosting	Max	0.4434	2.0822	0.1159	1.4430	6.4328	0.8817
	Mean	0.2891	1.3702	0.0683	1.1706	3.1576	0.8563
	Min	0.2227	0.2407	0.0359	0.4907	1.4259	0.8104
GradientBoosting	Max	0.4542	1.9462	0.1232	1.3951	3.3709	0.9264
	Mean	0.3103	1.5687	0.0753	1.2525	2.2861	0.8769
	Min	0.2215	0.3161	0.0463	0.5622	1.6568	0.8353
GARCH		0.9918	1.4218	0.3616	1.1924	4.9240	2.0384
ARFIMA		0.6054	0.8470	0.2655	0.9203	4.1131	1.2928
HAR-RV		0.7245	0.8985	0.2735	0.9479	4.5323	1.4629

Note: "C+" means adding the topological characteristics of complex network as forecasting indicators to the basic model.
Abbreviations: CNN, convolutional neural network; GRU, gated recurrent unit; MAE, mean absolute error; MAPE, mean absolute percentage error; MSE, mean squared error; MSLE, mean squared logarithmic error; RMSE, root mean squared error; SMAPE, symmetric mean absolute percentage error.

1099131x, 2024, 3, Downloaded from https://onlinelibrary.wiley.com/doi/10.1002/for.3049 by Sichuan University, Wiley Online Library on [24/03/2026]. See the Terms and Conditions (https://onlinelibrary.wiley.com/terms-and-conditions) on Wiley Online Library for rules of use; OA articles are governed by the applicable Creative Commons License

TABLE 14 Reduced volatility forecasting errors of CNN-GRU and GRU models for the China market and the US market after adding the topological characteristics.

	CNN-GRU		GRU	
	China market	US market	China market	US market
1 step	25.441%	8.112%	5.004%	6.793%
2 steps	19.382%	8.704%	4.804%	4.640%
5 steps	19.209%	8.201%	5.655%	5.065%

Abbreviations: CNN, convolutional neural network; GRU, gated recurrent unit.

characteristics of the price pattern and vertically compare the performance of the topology characteristics in the multi-step prediction model. Table 14 shows the reduced percentage of the average error (mean value of five evaluation criteria) for CNN-GRU and GRU models after adding the topological characteristics. The results show that, on the whole, the percentage of CNN-GRU and GRU models in the Chinese market is higher than that in the US market. This shows that the network topology characteristics of the price pattern have a stronger ability to predict the volatility of the Chinese market. According to Zhao (2012), this can be explained as the US market has reached weak efficiency, whereas the Chinese market has not yet reached weak efficiency. The predictability of stocks is negatively correlated with market efficiency. Therefore, the volatility in Chinese stock market is more predictable, and the accuracy of the model is more sensitive to the changes in forecasting indicators.

4 | CONCLUSIONS AND EXTENSIONS

In this paper, we first extract the topological characteristics used to describe the complex correlations between multiple stock markets and then input them along with other market trading indicators as independent variables into the CNN-GRU model to forecast the future volatility of stock index. Finally, we compare the 1-step and multi-step forecasting results of different models under several evaluation criteria. Among International Stock Markets, it is found that in terms of forecasting capability, the combined C + CNN-GRU model proposed in this paper performed the best, with 20.406%, 73.195%, 23.162%, 48.424%, 30.668%, and 0.795% reduction for MAE, MSE, MSLE, RMSE, MAPE, and SMAPE, respectively, compared with GRU model. Moreover, in terms of influencing factors, the addition of complex network topological characteristics has higher accuracy than that without these indicators, and the C + CNN-GRU model reduces 2.355%, 25.317%, 2.791%, 13.913%, and 9.961% for MAE, MSE, MSLE, RMSE, and MAPE, respectively, compared with the CNN-GRU model. This indicates that the multi-market co-movement has a significant enhancing effect on the index volatility forecasting.

In the future research, we will use the proposed method as the CNN-GRU model on the volatility forecasting of futures index, commodity, and so on. Moreover, the topological characteristics and CNN-GRU model can be applied to other forecasting problem, such as price forecasting and so on.

AUTHOR CONTRIBUTIONS

Yuping Song has designed the framework of this paper and implemented the work. Bolin Lei has performed the corresponding empirical volatility forecasting and drafted the work. Xiaolong Tang has assisted code debugging and preprocessed data. Chen Li has substantively revised it.

ACKNOWLEDGMENTS

This research is funded by National Natural Science Foundation of China (11901397, 71973098), Ministry of Education, Humanities and Social Sciences project (18YJCZH153), Youth Academic Backbone Cultivation Project of Shanghai Normal University (310-AC7031-19-003021), General Research Fund of Shanghai Normal University (SK201720) and Key Subject of Quantitative Economics of Shanghai Normal University (310-AC7031-19-004221), and Academic Innovation Team of Shanghai Normal University (310-AC7031-19-004228).

CONFLICT OF INTEREST STATEMENT

The authors declare that they have no known competing financial interests or personal relationships that could have appeared to influence the work reported in this paper.

DATA AVAILABILITY STATEMENT

The dataset for the empirical analysis can be derived from WIND that is a service company in mainland China providing financial data and information as Bloomberg.

ORCID

Yuping Song https://orcid.org/0000-0002-7506-1719

1099131x, 2024, 3, Downloaded from https://onlinelibrary.wiley.com/doi/10.1002/for.3049 by Sichuan University, Wiley Online Library on [24/03/2026]. See the Terms and Conditions (https://onlinelibrary.wiley.com/terms-and-conditions) on Wiley Online Library for rules of use; OA articles are governed by the applicable Creative Commons License

REFERENCES

Andersen, T., & Bollerslev, T. (1998). Answering the skeptics: Yes, standard volatility models do provide accurate forecasts. *International Economic Review*, *39*(4), 885–905. https://doi.org/10.2307/2527343

Bollerslev, T. (1986). Generalized autoregressive conditional heteroscedasticity. *Journal of Econometrics*, *31*(3), 307–327. https://doi.org/10.1016/0304-4076(86)90063-1

Bonanno, G., Caldarelli, G., Lillo, F., Micciché, S., Vandewalle, N., & Mantegna, R. (2004). Networks of equities in financial markets. *The European Physical Journal B: Condensed Matter and Complex Systems*, *38*(2), 363–371. https://doi.org/10.1140/epjb/e2004-00129-6

Brancaccio, E., Giammetti, R., Lopreite, M., & Puliga, M. (2018). Centralization of capital and financial crisis: A global network analysis of corporate control. *Structural Change and Economic Dynamics*, *45*, 94–104. https://doi.org/10.1016/j.strueco.2018.03.001

Caldarelli, G., Battiston, S., Garlaschelli, D., & Catanzaro, M. (2004). Emergence of complexity in financial networks. *Lecture Notes in Physics*, *650*, 399–423. https://doi.org/10.1007/978-3-540-44485-5_18

Cao, H., Lin, T., Li, Y., & Zhang, H. (2019). Stock Price pattern prediction based on complex network and machine learning. *Complexity*, *2019*, 4132485. https://doi.org/10.1155/2019/4132485

Chen, T., & Guestrin, C. (2016). XGBoost: A Scalable Tree Boosting System. In *KDD '16: Proceedings of the 22nd ACM SIGKDD international conference on knowledge discovery and data mining* (pp. 785–794). Association for Computing Machinery.

Chen, W. (2018). Forecasting volatility of Shanghai composite index with deep learning. *Statistics & Information Forum*, *33*(5), 99–106.

Cho, K., van Merrienboer, B., Gulcehre, C., Bahdanau, D., Bougares, F., Schwenk, H., & Bengio, Y. (2014). *Learning phrase representations using RNN encoder-decoder for statistical machine translation. In Proceedings of 2014 Conference on Empirical Methods in Natural Language Processing* (pp. 1724–1734). Association for Computational Linguistics.

Corsi, F. (2009). A simple approximate long memory model of realized volatility. *Journal of Financial Econometrics*, *7*, 174–196. https://doi.org/10.1093/jjfinec/nbp001

Corsi, F., Mittnik, S., Pigorsch, C., & Pigorsch, U. (2008). The volatility of realized volatility. *Econometric Reviews*, *27*, 46–78. https://doi.org/10.1080/07474930701853616

Diebold, F., & Mariano, R. (1995). Comparing predictive accuracy. *Journal of Business and Economic Statistics*, *13*, 253–263.

Ding, Z., & Xu, J. (2013). Research on co-movement of Shanghai and Hong Kong stock market——An analysis based on GARCH model. *Journal of Financial Development Research*, *5*, 20–25.

Glosten, R., Jagannathan, R., & Runkle, E. (1993). On the relation between the expected value and the volatility of the nominal excess return on stocks. *Journal of Econometrics*, *48*(5), 1779–1801.

Hopfield. (1982). Neural networks and physical systems with emergent collective computational abilities. *Proceedings of the National Academy of Sciences*, *79*(8), 2554–2558.

LeCun, Y., Bottou, L., Bengio, Y., & Haffner, P. (1998). Gradient-based learning applied to document recognition. *Proceedings of the IEEE*, *86*(11), 2278–2324. https://doi.org/10.1109/5.726791

Li, C., Zhang, X., Qaosar, M., Ahmed, S., Alam, K., & Morimoto, Y. (2019). Multi-factor Based Stock Price Prediction Using Hybrid Neural Networks with Attention Mechanism. In *2019 IEEE Intl Conf on dependable, autonomic and secure computing, Intl Conf on pervasive intelligence and computing, Intl Conf on cloud and big data computing, Intl Conf on cyber science and technology congress (DASC/PiCom/CBDCom/CyberSciTech)* (pp. 961–966). IEEE.

Li, P., & Wang, B. (2006). An approach to Hang Seng Index in Hong Kong stock market based on network topological statistics. *Chinese Science Bulletin*, *51*(5), 624–629. https://doi.org/10.1007/s11434-006-0624-4

Liu, C., & Arunkumar, N. (2019). Risk prediction and evaluation of transnational transmission of financial crisis based on complex network. *Cluster Computing*, *22*(2), 4307–4313. https://doi.org/10.1007/s10586-018-1870-3

Liu, J., Ma, F., & Zhang, Y. (2019). Forecasting the Chinese stock volatility across global stock markets. *Physica A: Statistical Mechanics and its Applications*, *525*, 466–477. https://doi.org/10.1016/j.physa.2019.03.097

Liu, Y. (2019). Novel volatility forecasting using deep learning—Long short term memory recurrent neural networks. *Expert Systems with Applications*, *132*(OCT.), 99–109. https://doi.org/10.1016/j.eswa.2019.04.038

Ma, T., & Wu, W. (2018). Volatility prediction for financial options based on machine learning algorithms. *Academia Bimestrie*, *5*, 201–209.

Nelson, D. (1991). Conditional Heteroskedasticity in asset returns: A new approach. *Econometrica*, *59*(2), 347–370. https://doi.org/10.2307/2938260

Ouyang, F., Bo, Z., Jiang, X., & Boris, P. (2015). Intrinsic multi-scale dynamic behaviors of complex financial systems. *PLoS ONE*, *10*(10), e0139420. https://doi.org/10.1371/journal.pone.0139420

Saeedian, M., Jamali, T., Kamali, M., Bayani, H., Yasseri, T., & Jafari, G. (2019). Emergence of world-stock-market network. *Physica a: Statistical Mechanics and its Applications*, *526*, 120792. https://doi.org/10.1016/j.physa.2019.04.028

Wu, H., & Wang, Z. (2014). Dynamic analysis of the linkage of stock markets in mainland China, Hong Kong and Taiwan based on DCC-MVGARCH model. *Economic Research Guide*, *31*(128), 116–119.

Xiong, R., Nichols, E., & Shen, Y. (2016). Deep learning stock volatility with google domestic trends. *Economics*, arXiv, *1512*, 04916.

Yang, C., Chen, Y., Hao, W., Shen, Y., Tang, M., & Niu, L. (2014). Effects of financial crisis on the industry sector of Chinese stock market—From a perspective of complex network. *Modern Physics Letters B*, *28*(13), 1450102. https://doi.org/10.1142/S0217984914501024

Yang, H., Wang, Y., & Wang, Y. (2020). Imported financial risk in China: Measurement, affecting factors and sources. *The Journal of Quantitative & Technical Economics*, *37*(7), 113–133.

Yang, Z., & Zhou, Y. (2018). Global systemic financial risk spillovers and their external shocks. *Social Sciences in China*, 12, *69*(90), 200–201.

1099131x, 2024, 3, Downloaded from https://onlinelibrary.wiley.com/doi/10.1002/for.3049 by Sichuan University, Wiley Online Library on [24/03/2026]. See the Terms and Conditions (https://onlinelibrary.wiley.com/terms-and-conditions) on Wiley Online Library for rules of use; OA articles are governed by the applicable Creative Commons License

Zakoian, J. (1994). Threshold heteroskedastic models. *Journal of Economic Dynamics & Control*, *18*(5), 931–955. https://doi.org/10.1016/0165-1889(94)90039-6

Zhang, B., Fan, Z., & Li, X. (2010). Co-movement between China and U.S.'s stock markets. *Economic Research Journal*, *11*, 141–151.

Zhao, X. (2012). An empirical test of market effectiveness between the US and Chinese stock markets. *Manager' Journal*, *6*, 45–58.

AUTHOR BIOGRAPHIES

Yuping Song is an associate professor at the School of Finance and Business, Shanghai Normal University, China. He is an expert on analysis of financial large data.

Bolin Lei is a master of Finance at the Faculty of Economics and Management, East China Normal University, China. Her research interest is financial modeling.

Xiaolong Tang is a master of Finance at the School of Finance and Business, Shanghai Normal University, China. His research interest is financial statistics and modeling.

Chen Li is a doctor of Mathematics at the Zhongtai Securities Institute for Financial Studies, Shandong University, China. His research interest is high-frequency financial modeling.

How to cite this article: Song, Y., Lei, B., Tang, X., & Li, C. (2024). Volatility forecasting for stock market index based on complex network and hybrid deep learning model. *Journal of Forecasting*, *43*(3), 544–566. https://doi.org/10.1002/for.3049

1099131x, 2024, 3, Downloaded from https://onlinelibrary.wiley.com/doi/10.1002/for.3049 by Sichuan University, Wiley Online Library on [24/03/2026]. See the Terms and Conditions (https://onlinelibrary.wiley.com/terms-and-conditions) on Wiley Online Library for rules of use; OA articles are governed by the applicable Creative Commons License